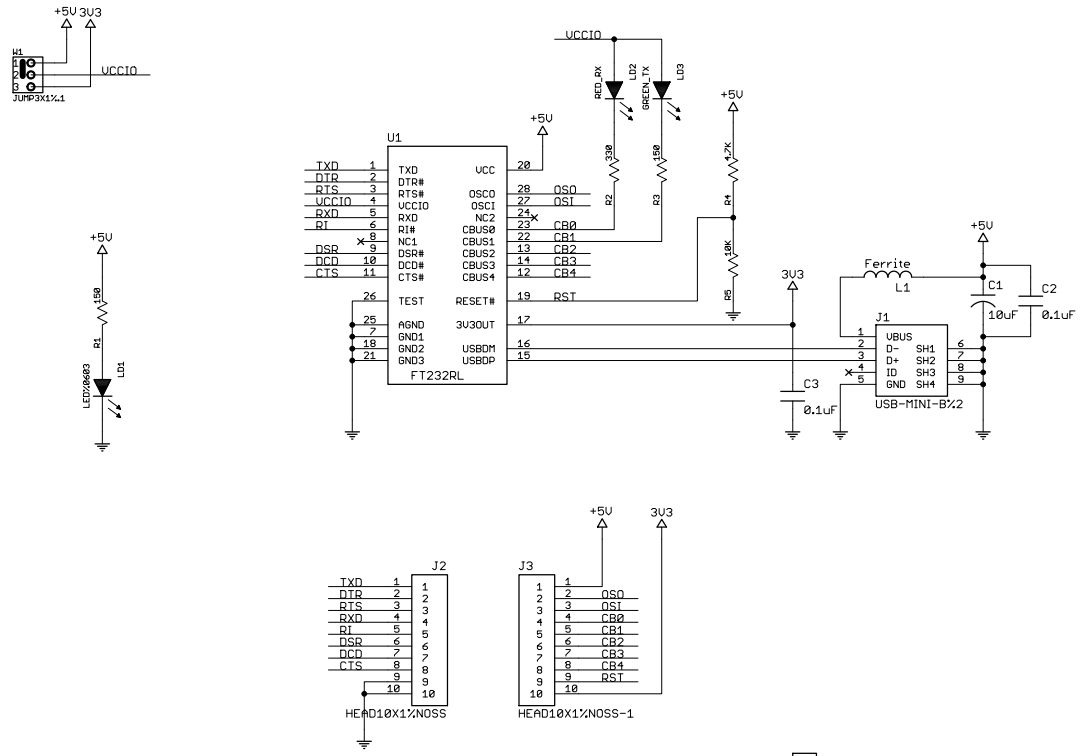

GRAVITECH WWW.GRAVITECH.US	MADE IN U.S.A ELECTRONIC EXPERIMENTAL SOLUTIONS	
TITLE: FT232RL-BO		
DWG NUMBER: FT232RL-BO		REV: 1.0
DATE: not saved!	SIZE: B	SHEET: 1/1